DALY INTERNATIONAL

OPTUS

Planning Application
Proposed New Telecommunications Facility

Lot 2 Springhill Road, Cuballing, WA 6311

(Lot 2 on Plan 14367, CT: Volume 1662, Folio 449)

Prepared on behalf of **Optus**
by Daly International Pty Ltd
31 March 2017

DALY INTERNATIONAL

TABLE OF CONTENTS

Section ***Page***

EXECUTIVE SUMMARY

Proposal	Optus Mobiles Pty Ltd (Optus) proposes installation of a new telecommunications facility at Lot 2 Springhill Road, Cuballing. The proposal is part of a nationwide rollout to improve mobile coverage and access to enhanced services via the Optus mobile network in metropolitan, regional and rural areas across Australia. The proposed works involve installation of: • one (1) new 60 tall guyed mast tower; • three (3) new antennas, to be mounted at the top of the tower on a headframe (C/L 57m); • one (1) new parabolic transmission antenna (C/L 53m); • one (1) new equipment shelter coloured *'Paper Bark'*, with a floor area of 7.5m^2, located adjacent to the new tower; and; • ancillary equipment associated with the operation of the facility. The new facility will be wholly contained within a compound enclosed by a 2.4m tall chain link fence.	
Purpose	To provide new coverage, including 3G and 4G coverage the township of Cuballing, including the Great Southern Highway, Cuballing West Road and Wandering-Narrogin Roads.	
Property Details	Lot 2 Springhill Road, Cuballing (Lot 2 on Plan 14367)	
Town Planning Scheme	Council: Shire of Cuballing Scheme: Town Planning Scheme No. 2 Zone: Rural - General Agriculture Definition: Telecommunications Infrastructure	
Metropolitan Region Scheme	Scheme: Nil Zone: Nil	
Planning Considerations	Referrals	N/A
	State Planning	SPP 5.2 (Telecommunications Infrastructure)
	Local Policies/Strategy	Nil
	Development and use of the land for the purpose of a new mobile telecommunications base station.	
Application	Daly International Box 14/Level 5/97 Pirie Street ADELAIDE, SA 5000 Contact: Daniel Hay 0415 950 215 DHay@dalyinternational.com.au Ref: Cuballing (P8084) RFNSA Ref: 6311003	
Applicant	Optus Mobile Pty Ltd (C/-Daly International)	
Quality and Assurance Check	D Hay	

1 INTRODUCTION

This development application has been prepared by Daly International Pty Ltd, acting on behalf of Optus Mobile Pty Ltd ('Optus') for the deployment of mobile telecommunications facilities. This application seeks approval for the construction of a new mobile phone base station at Lot 2, Springhill Road, Cuballing.

Optus regularly tests the efficiency of its existing network and has identified shortcomings in coverage around the Cuballing area. In particular, improvements in coverage are sought to address network capacity issues, coverage blackspots and future development within the region.

The proposed facility comprises installation of:

- one (1) new 60 tall guyed mast tower;
- three (3) new antennas, to be mounted at the top of the tower on a hexagonal headframe (C/L 57m);
- one (1) new parabolic transmission antenna;
- one (1) new equipment shelter coloured 'Paper Bark', with a floor area of 7.5m^2, located adjacent to the new tower; and;
- ancillary equipment associated with the operation of the facility.

The facility is to be located within a leased compound, enclosed by a new 2.4m high chainlink security fence. Access to the site is to be via the existing site access off Springhill Road.

All mobile carriers are bound by the operational provisions of the Telecommunications Act 1997 and the Telecommunications Code of Practice 1997. While some works can be carried out under the Telecommunications (Low Impact Facilities) Determination 1997 without development approval, this proposal is not defined as 'Low Impact' and therefore requires Council approval to proceed.

This report supports an application for development and use of the leased area within the subject site for a new telecommunications facility servicing the wider the above defined area.

2 BACKGROUND

2.1 Benefits of Mobile Technologies

Mobile telecommunications play a central role in society and are becoming more deeply integrated into our day to day lives. Mobile communications networks shape how and when people communicate and how we access information on a daily basis. Today, improved connectivity means that mobile devices are used for everything from commerce and research to location-based services and social media.

Individuals, families, businesses and society are all benefiting from the improved connectivity facilitated by mobile technologies.

In addition to its personal and social value, the evolution of mobile technologies has delivered significant benefits to the Australian economy by improving productivity, business management and customer engagement. Since its introduction, mobile technology has played a key role in stimulating labour productivity growth by allowing employees to be more efficient, with more productive use of time. According to Deloitte (2016), the Australian economy is approximately $34 billion larger in 2015 than it would have been otherwise due to the long-term productivity of mobile technologies.

Mobile technology's economic contribution is not limited to improving productivity. It improves connectivity and participation in the workforce. Mobile technology also provides employees with the flexibility to work from home, promoting sustainable commuting and reducing traffic congestion. According to the Australian Mobile Telecommunications Association (AMTA), two decades ago only 4% of Australians owned a mobile device. According to the Australian Bureau of Statistics (ABS), there are now over 21 million subscribers with internet access connections via a mobile handset in Australia (ABS, 2015). Mobile technology's continual development has allowed it to become the preferred channel to access the internet for most people in Australia and the rest of the world.

2.2 Purpose of the Proposal

To cater for the growing demand for mobile services, Optus has embarked on a nationwide rollout to deliver an improved, reliable telecommunications network to the Australian public. The rollout will provide improved mobile coverage and enhanced services in metropolitan, regional and rural areas throughout Australia. The rollout consists of the upgrade of existing telecommunications facilities and, where required, the installation of new mobile base stations to expand the coverage footprint and offer seamless mobile services.

Additional base stations are required where surrounding facilities cannot provide sufficient coverage to a target area. New facilities are also required where existing base stations are fully utilised and cannot service additional uses in the area. Optus has undertaken analysis of their mobile network in the Cuballing area and has identified that coverage and network quality need to be improved. If this investment is not made, the following main issues will arise:

- Users may have difficulty connecting to the mobile network or the call may drop out. This impacts businesses, residents, visitors to the area and the ability of the user to contact emergency services.
- Users may experience reduced data transfer speeds, longer download times and poor network performance at busy times of the day with data intensive and time sensitive applications (e.g. newscasts, social media, mobile banking, weather forecasts, sports highlights etc.).

Optus has undertaken investigations into the use of other Carrier and broadcast facilities within the area. In this case there are no existing facilities that meet the criteria for Optus' improvements, as discussed in more detail below. As such, it is concluded that the deployment of a new Optus mobile phone base station in the Cardup area is the only viable solution.

2.3 Network Coverage Objectives

Optus regularly undertakes detailed assessments of the performance and coverage of their digital mobile telephone network to ensure the system is reliable and achieving the required objectives. Reference to customer demand also provides an indication of poor performance or where coverage does not exist.

Recently, the network has experienced significant and growing demand for mobile broadband. As usage of smart phones, tablets and other wireless devices continues to rapidly expand, further demand is placed on the network. Optus is aware that their customers are sensitive to network dropouts and poor speed and wants to provide services that meet the expectations of the Australian community.

In this case, Optus has identified significant demand for coverage by users in and around the target area.

3 SITE SELECTION

3.1 Site Selection Process

Optus carefully examined a range of possible deployment options in the area before concluding that a new telecommunications facility located at Springhill Road would be the most appropriate solution.

Optus commenced the site selection process with a search of potential sites that meet the network's technical requirements, with a view to also having the least possible impact on the surrounding area. Optus applies and evaluates a range of criteria as part of this site selection process.

Optus assesses the technical viability of potential sites through the use of computer modelling tools that produce predictions of the coverage that may be expected from these sites, as well as from the experience and knowledge of radio engineers.

There are also a number of other important criteria that Optus uses to assess and select potential site options. These take into account factors other than the technical performance of the site, and include:

- The potential to upgrade existing Optus facilities within the region;
- The potential to co-locate on an existing telecommunications facility;

- The potential to locate on an existing building or structure;
- Regulatory compliance and the potential to obtain relevant planning approvals;
- Proximity to community sensitive locations and areas of environmental heritage;
- Impacts on the existing use of the site;
- The ability to secure tenure with landowner; and
- The cost of developing the site and the provision of utilities (power, access to the facility and transmission links).

During the site selection process for the new facility, Optus carefully considered all of the above criteria. This analysis is detailed in the following sections.

3.2 Co-location Opportunities

The Communications Alliance Industry Code – Mobile Phone Base Station Deployment promotes the use of existing sites in order to mitigate the effects of facilities on the landscape. A number of existing facilities within proximity to Cuballing were investigated as potential candidates for co-location.

The closest mobile facilities in the area are as follow, also shown in **figure 1**:

- **RFNSA 6311002 (3.15km) Lot 425 Hotham Street, Cuballing WA 6311**
  This is a NBN Co. 40m monopole. Telstra are co-located on the tower already. NBN Co. confirmed that the highest available height on the monopole is 31m for, Optus's cannot achieve transmission link at this height.

  Therefore the candidate cannot be considered further.

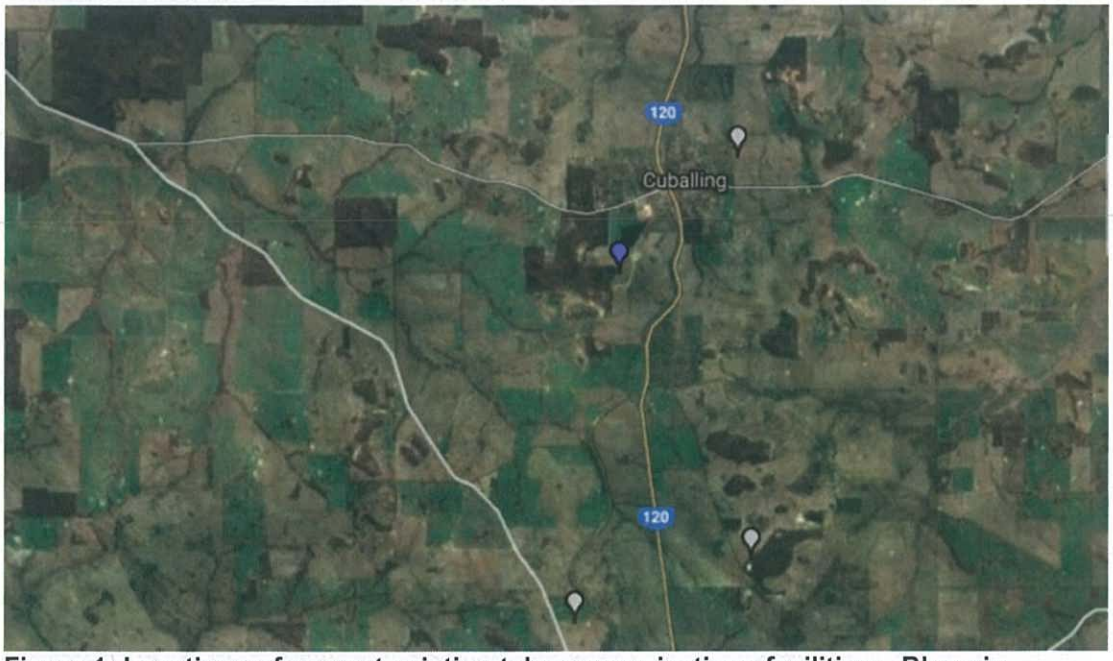

Figure 1: Locations of nearest existing telecommunications facilities – Blue pin identifies subject site (RFNSA website)

3.3 New Facility Locations

In addition to there being no suitable telecommunications structures for co-location, there were no tall buildings or structures that could be used as a support structure for the antennas. As no co-location options are suitable, Optus considers that a new telecommunications facility will be required to service the Cuballing area.

3.3.1 Site Identification and Assessment

A large number of potential sites were initially identified through a desk based assessment. A shortlist of the four (4) most suitable candidates was drawn up and a detailed assessment was undertaken. The locations of these are shown in **figure 2**. **Table 1** provides the summary of the assessment of each site.

Figure 2: Candidates Investigated (Google Earth)

Candidate	Site Details	Facility Type	Description & Comments
A	Lot 1 Springhill Rd, Cuballing 6311	60m Guyed Mast	The radio frequency need for the site can be achieved at this site, however the candidate was discounted due to unfavourable Planning and construction constraints at the site. The land is elevated and would be well visible from several main roads as well as being close to a dwelling on the land. It is preferable to minimise the total number of opportunities that the facility would be highly visible form – in this instance candidate C is preferable.

			Additionally, construction would be unreasonably expensive at this site as a particularly long power run would be required. Therefore the candidate was be pursued.
B	Lot 425 Hotham Street Cuballing WA 6311	Co-locate on NBN Co. facility	While the radio frequency need for the site could be achieved at this site, the site is too low for a line-of-site to achieve transmission i.e. the site is unable to link into the Optus network). Therefore the candidate cannot be pursued.
C	Lot 2, Springhill Road, Cuballing WA 6311	60m Guyed Mast	Candidate C is Optus's preferred candidate.
D	170 Watsons Road, Cuballing, WA 6311	60m Guyed Mast	The radio frequency need for the site can be achieved at this site, however the candidate was discounted due to marginal Planning constraints at the site. Candidate C is considered to have marginally more favourable planning merit compared to Candidate D. therefore, as Candidate D did not result in the best planning outcome, the candidate was discounted. .

Table 1: Summary of candidates investigated.

3.4 Site Selection Conclusion

A thorough assessment of potential telecommunications base-station sites in the surrounding area has been undertaken. For one or more reasons, the majority of these sites have been ruled out.

All candidates were located in a General Agriculture zone as identified by the Shire of Cuballing Town Planning Scheme No.2.

One (1) candidate was a co-location opportunity, however the existing facility was too low for Optus to achieve line-of-site for transmission purposes. All three (3) remaining greenfield options are capable of achieving the radio frequency demand for the site however Candidate C is the standout option from a good town planning perspective. Therefore, **Candidate C** is the most feasible option to progress for this development application. Accordingly, on behalf of Optus, we submit this development application to the Shire of Cuballing for a new telecommunications facility.

4 SITE CONTEXT

4.1 Subject Site and Surrounds

The subject site and surrounds are best described as an open rural setting, with the primary land use being for agricultural purposes. The site is located on the eastern edge of Springhill Road, some 1.2km south of the Cuballing Township. The subject land is a large rural paddock which maintains some groups of established vegetation. The land maintains large frontages to both Springhill Road (western boundary) and the Great Southern Highway (eastern boundary). Both road frontages are well landscaped providing a good level of enclosure for vehicle users travelling along these roads.

The subject land occupies the entire eastern area defining the locality. West of the site the area is comprises undeveloped bushland, with a small local cemetery set within the corner of the bushland and Springhill Road. Refer to **figure 8** showing a photograph from the cemetery looking towards the subject land.

The closest dwelling is also located east, some 530m from the site. The dwelling is well setback from Springhill Road. The established bushland sits between the dwelling and the subject land which should provide a high level of visual screening of the proposed structure when viewed from the dwelling.

Figures 3-11 illustrate the context and appearance of the proposed site.

Figure 3: Context of proposed Optus site (Google Earth) – Prime Candidate C

Figure 4: Close up of Prime Candidate C

Figure 5: Looking south west towards the site with Springhill Road in the background

Figure 6: View from the site looking south adjacent to Springhill Road

Figure 7: View from the site looking north within the subject land

Figure 8: Looking south east towards the site from local cemetery

Figure 9: View looking south east towards facility along Springhill Road – note site entrance in far left of photo

Figure 10: View looking east away from the facility

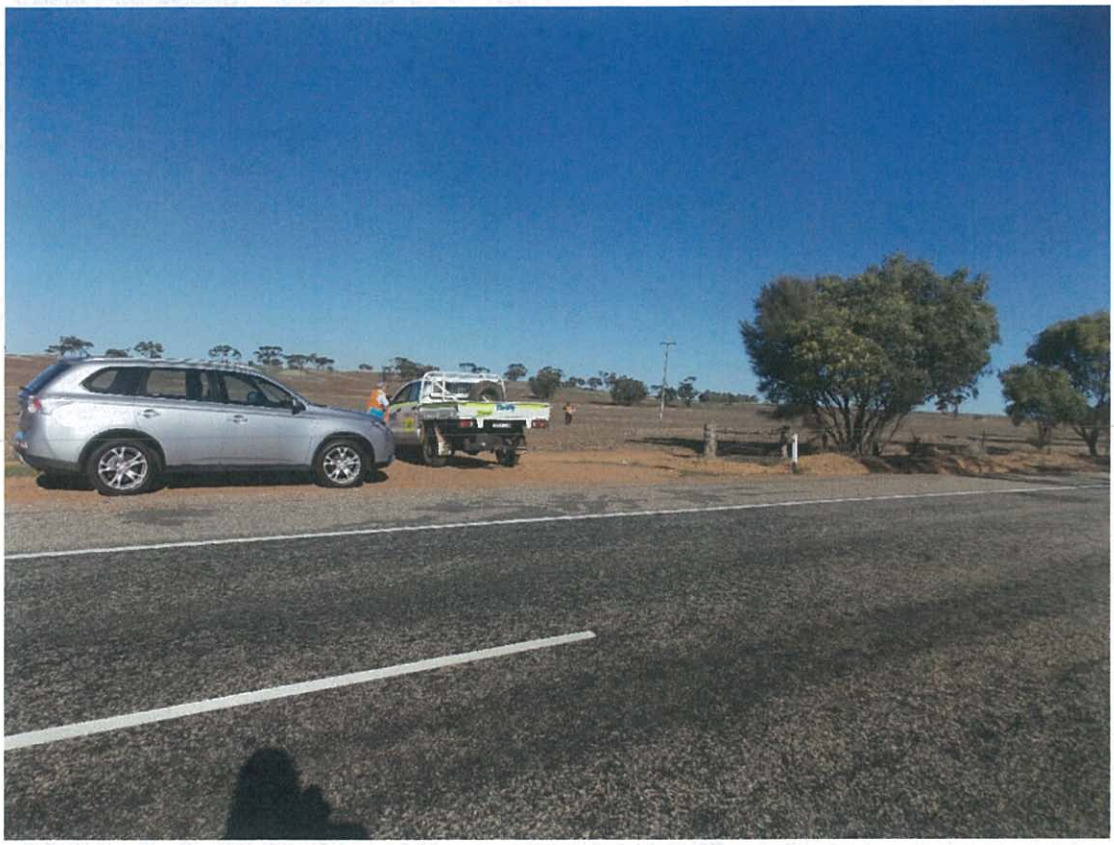

Figure 11. Proposed use of existing access from Springhill Road

5 THE PROPOSAL

5.1 Installation details

Optus proposes to construct a new telecommunications facility comprising installation of the following elements:

- one (1) new 60 tall guyed mast;
- three (3) new antennas, to be mounted at the top of the tower on a hexagonal headframe (C/L 57m);
- two (2 parabolic transmission antennas;
- one (1) new equipment shelter coloured 'Pale Eucalypt', with a floor area of 7.5m^2, located adjacent to the new tower; and;
- ancillary equipment associated with the operation of the facility.

The new facility will be wholly contained within a compound enclosed by a 2.4m tall chain link fence.

5.2 Access details

Mobile base stations operate on a continuously unmanned basis and require infrequent maintenance. Accordingly, the proposed facility will not be a significant generator of vehicular or pedestrian traffic and will not adversely impact local traffic flow.

Access to the site is proposed off Springhill Road via the existing site access.

Vehicles and plant involved in the construction will be parked inside the site, off Springhill Road on the cleared area adjacent to the proposed compound. The exact details of plant location will be finalised once the construction contractor has been selected. No dedicated parking spaces are proposed; the ongoing maintenance will be completed by a single light vehicle visiting the site 1-5 times per year who can park on the access track.

5.3 Power details

The power will be run underground to the facility from the nearest power pole located within the property. The approval process with Western Power has commenced.

5.4 Construction of the Proposed Facility

The construction of a telecommunications facility fundamentally consists of four stages:

1. Site preparation;
2. Facility construction;
3. Equipment installation and commission; and

4. Facility optimisation.

Any traffic impacts associated with construction will be of a short term nature and are not anticipated to adversely impact the surrounding road network. In the unlikely event that a road closure will be required, Optus will request permission from the relevant authorities.

Impacts on the environment and local amenity as a result of the construction by means of noise, dust and vibration will be short term in nature. The distance between the proposal site and any residential or sensitive development will mitigate any detrimental impacts.

6 COMMONWEALTH PLANNING CONTROLS

Licensed telecommunications carriers must operate under the provisions of the *Telecommunications Act 1997* and the following legislation:

- *The Telecommunications (Low Impact Facilities) Determination 1997* (as amended);
- *The Telecommunications Code of Practice 1997*; and
- *The Environment Protection and Biodiversity Conservation (EBPC) Act 1999.*

6.1 Telecommunications Act 1997 & Telecommunications (Low Impact Facilities) Determination 1997

The Telecommunications Act 1997 has been operative since 1 July 1997. This legislation establishes the criteria for 'Low Impact' telecommunications facilities. If a proposed facility satisfies the requirements of a 'Low Impact' facility, the development is exempt from the planning approval process.

Further clarification of the term 'Low Impact' is provided in *The Telecommunications (Low Impact Facilities) Determination 1997*, which identifies the type of facilities that can be 'Low Impact' and the areas in which these facilities can be installed.

The facility proposed here is not 'Low Impact' under the definitions contained in the Commonwealth Legislation and is therefore subject to State and local planning laws and guidelines. In this case, the provisions of *The Planning & Development Act 2005*, and the Shire of Cuballing Town Planning Scheme, together with relevant policies made under these documents, will be applicable to the proposal. The Shire of Cuballing will be the determining authority in relation to the proposal.

6.2 Telecommunications Code of Practice

Under *The Telecommunications Act 1997* the Government established *The Telecommunications Code of Practice 1997*, which sets out the conditions under which a carrier must operate.

Section 2.11 of *The Telecommunications Code of Practice 1997* sets out the design, planning and installation requirements for the carriers to ensure the installation of facilities in accordance with industry 'best practice'.

6.3 The Mobile Phone Base Station Deployment Industry Code C564:2011

The Mobile Phone Base Station Deployment Industry Code C564:2011 (the 'Deployment Code') is designed to allow communities and Councils to have greater participation in decisions made by telecommunications carriers when deploying mobile phone base stations, and to provide greater transparency to local communities and councils when a carrier is planning and selecting a site for, installing and operating mobile phone radio communications infrastructure.

Table 2, below, demonstrates how the objectives of the Deployment Code have been met in this case. The terms Electromagnetic Emissions (EME) and Electromagnetic Radiation (EMR) are used interchangeably in the Deployment Code to mean the radiofrequency portion of the electromagnetic spectrum.

Deployment Code Objective	Response
Apply a precautionary approach to the deployment of mobile phone radio communications infrastructure	The site selection process utilised here follows guidance set out at section 4 of the Deployment Code considering environmental and community sensitivities.
Provide best practice processes for demonstrating compliance with relevant exposure limits and protection of the public	An Environmental EME Report has been produced for the site in accordance with requirements of the Deployment Code and following the template shown at Appendix C of the Deployment Code. The site specific report is provided at Appendix B to this report, showing that the maximum EME level calculated as a result of the proposed systems is 0.18% of the public exposure limit.
Ensure that the exposure of the community to EMR is minimised	The environmental EME level is minimised through radio network design. Adaptive power control is the network feature that automatically adjusts the power and hence minimises EME from both the base station and the handset. Another feature, called discontinuous transmission, reduces EME emissions by automatically switching the transmitter off when no speech or data is sent. The site has been designed to restrict public access to any areas that exceed the general public exposure limits. EME exposure to the public will be minimised by: • Inherent height of antenna and separation from publically accessible areas;

	• Site access restrictions – secure fence, locked gates and & signage; • Site access restrictions – restricted ladder access.
To ensure relevant stakeholders are informed, consulted and engaged with before mobile phone radio communications infrastructure is constructed	As per guidance in the Deployment Code, it is expected that public consultation will occur through the Development Application process where one is required. Given the distance to any sensitive locations or uses, it has not been considered necessary to undertake any advance consultation in relation to the proposed development.
Specify standards for consultation, information availability and presentation	
Consider the impact on the wellbeing of the community, physical or otherwise, of mobile phone radio communications infrastructure site selection	The preferred site recommended for development maximises separation to any residential and sensitive development. As a result, detrimental impacts on the local community are minimised, while providing a high quality mobile telecommunications service for the benefit of the community.
To ensure Council and community views are incorporated into the mobile phone radio communications infrastructure site selection.	This opportunity will be provided during the Development Application process.

Table 2: Summary of how Optus has addressed the objectives of the Deployment Code.

6.4 The Environment Protection and Biodiversity Conservation (EPBC) Act 1999

The EPBC Act 1999 obliges telecommunications carriers to consider 'matters of national environmental significance'. Under this legislation, an action will require approval from the Minister of Environment if it has, or is likely to have, an impact on a matter of 'national environment significance'. There are nine matters of national significance protected under the EPBC that must be considered, classified as:

- World heritage places
- National heritage places
- Wetlands of international importance (listed under the Ramsar Convention);
- Listed threatened species and ecological communities;
- Migratory species protected under international agreements;
- Commonwealth marine area;
- The Great Barrier Reef Marine Park;
- Nuclear actions (including uranium mines);
- A water resource in relation to coal seam gas development and large coal mining development.

Figure 12, together with the EPBC Act Protected Matters Report generated on the location of the proposed facility, shows that there is 1 listed threatened ecological community, 10 threatened species, 3 migratory species. There will be no clearing

associated with the construction of the facility and therefore these species are unlikely to be affected.

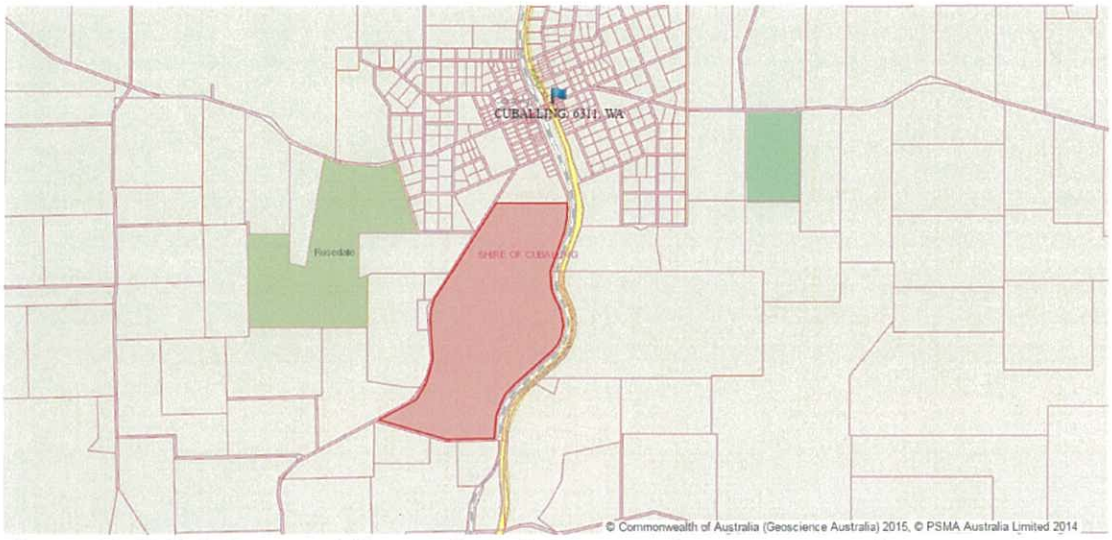

Figure 12: EBPC Protected Matters Search (www.environment.gov.au)

7 STATE PLANNING CONTROLS

7.1 State Legislation

7.1.1 The Planning and Development Act 2005

The Planning & Development Act 2005 is the primary piece of legislation governing development and subdivision in Western Australia. It sets out overarching development controls, in particular the requirement to obtain approval to commence development where it is established in a planning scheme.

7.1.2 The Planning & Development Act (Local Planning Scheme) Regulations 2015

The Planning and Development (Local Planning Schemes) Regulations 2015 (the Regulations) took effect on the 19th of October 2015, replacing *The Town Planning Regulations 1967*. Amongst other elements, the Regulations introduce a set of deemed provisions that now form part of every local planning scheme in the State.

Under Part 7 of the Regulations (Requirement for development approval), a person must not commence or carry out any works on, or use, land in the Scheme area unless:

a) The person has already obtained the development approval of the local government; or
b) The development is of a type referred to in clause 61.

Clause 61 defines types of development for which development approval is not required. As the proposed development of a telecommunications facility does not

meet the criteria, it requires development approval under the Shire of Cuballing Local Planning Scheme.

7.1.3 The Environmental Protection Act 1986

The Environmental Protection Act 1986 (EP Act) establishes a system where environmental assessment of proposals is required if there is likely to be a significant effect on the environment. This is generally not needed where a determination is made under a District Planning Scheme because the Scheme provisions will have undergone assessment by the Environmental Protection Authority (EPA) and therefore the impacts of such an approval would have been considered by the EPA.

This proposal does not raise matters not already considered under the EPA's assessment of the District Planning Scheme. Furthermore, it does not involve major clearing and is not for a 'prescribed class' under the Act. It is therefore not considered that referral to the EPA would be necessary.

7.2 State Statutory Provisions

State Planning Policies (SPPs) are developed under Part 3 of *The Planning and Development Act 2005* and provide the highest level of planning policy control and guidance in Western Australia. Development Control Policies (DCPs) are part of the planning framework, however are more used to guide decision making in relation to subdivision and development applications.

7.2.1 State Planning Policy 5.2 – Telecommunications Infrastructure (2015)

Primarily, the policy aims to balance the need for effective telecommunications services and effective roll-out of networks with the community interest in protecting the visual character of local areas. The objectives of the policy are to:

- Facilitate the provision of telecommunications infrastructure in an efficient and environmentally responsible manner to meet community needs;
- Manage the environmental, cultural heritage, visual and social impacts of telecommunications infrastructure;
- Ensure that telecommunications infrastructure is included in relevant planning processes as essential infrastructure for business, personal and emergency reasons; and
- Promote a consistent approach in the preparation, assessment and determination of planning decisions for telecommunications infrastructure.

The site was selected to minimise visual impacts by being away from the developed areas and out of direct line of sight for most people in and passing through the area.

Table 3, below, sets out the provisions of the policy relating to visual impacts together with the response for this situation.

Policy provision	Response
Telecommunications infrastructure should be sited and designed to minimise visual impact and whenever possible:	
a) be located where it will not be prominently visible from significant viewing locations such as scenic routes, lookouts and recreation sites	**The proposal is located within a rural area away from the Cuballling township. The site is located off Springhill Road, a local road which is not considered part of the main tourist route.** **The subject land shares a boundary to the Great Southern Highway, however maintains a considerable distance (in excess of 1km) from the highway – The highway is also very well landscaped along the corridor.** **Therefore it is considered that the accumulative visual impact upon the local landscape is not considered significant.**
b) be located to avoid detracting from a significant view of a heritage item or place, a landmark, a streetscape, vista or a panorama, whether viewed from public or private land	**The site has been selected so as not to compromise any significant views, places of significance or local landmarks.** **As mentioned above, the proposal will be visible from along Springhill Road. This road is generally well landscaped which will provide immediate screening of the facility.** **The proposal will be partially visible from the local cemetery, again, direct views will not be possible.** **One means of considering the visual impact is to consider the alternative sites available. In this instance the co-location at Lot 425 Hotham Street Cuballing WA 6311 would be the best means of minimising visual impact upon the locality. However this option is not capable of linking to the Optus network and therefore is not a viable candidate.** **Other alternative candidate were deemed to have a visual impact greater than the nominated site and where therefore discounted.**
c) not be located on sites where environmental, cultural heritage, social and visual landscape values may be compromised	**The subject site is rural land with some groups of remanent vegetation scattered throughout the land. There are no reported environmental, cultural or heritage sites on the subject land.** **The local cemetery is 80m away set within established bushland. The site is not considered to compromise the social value of the cemetery.** **As described throughout this report, the landscape value of the locality is well regarded. The site has been located away from main tourist routes and set behind road side vegetation to help minimise potential visual impact.**

d) display design features, including scale, materials, external colours and finishes that are sympathetic to the surrounding landscape;	**The antennas will be factory grey colour and the shelter will be 'Pale Eucalypt' finish.** **The structure will be constructed of steel, which is non-reflective and best suited to be sympathetic with the surrounding landscape. A guyed mast is the only structure capable of achieving the necessary height and therefore other structures cannot be considered.**

Table 3: Visual Impacts expectations set out in SPP 5.2

In addition to the visual impact assessment addressed in **table 3, SPP 5.2** highlights that telecommunications infrastructure should be located where it will facilitate continuous network coverage and/or improve telecommunications services to the community. As described in more detail in section 2 to this report, in this situation the facility will provide improved coverage to the Cuballing region.

SPP 5.2 goes on to highlight that telecommunications infrastructure should be co-located where possible and preferably within existing infrastructure corridors where existing or proposed buildings are not available. In this case, as set out in section 3, there were no viable co-location opportunities within the search area and there are no buildings or structures that could be used that would be capable of achieving coverage objectives.

As set out above, the proposal is in compliance with the aims and objectives of **SPP 5.2**.

8 LOCAL PLANNING PROVISIONS

8.1 Shire of Cuballing Town Planning Scheme No. 2 (TPS)

8.1.1 Scheme & Zone Provisions

Under the TPS, the proposed site falls within land zoned as **'General Agriculture'** as shown in **figure 14**.

As there are currently no provisions in the Shire of Cuballing Tow Planning Scheme No.2 relating to mobile phone facilities.

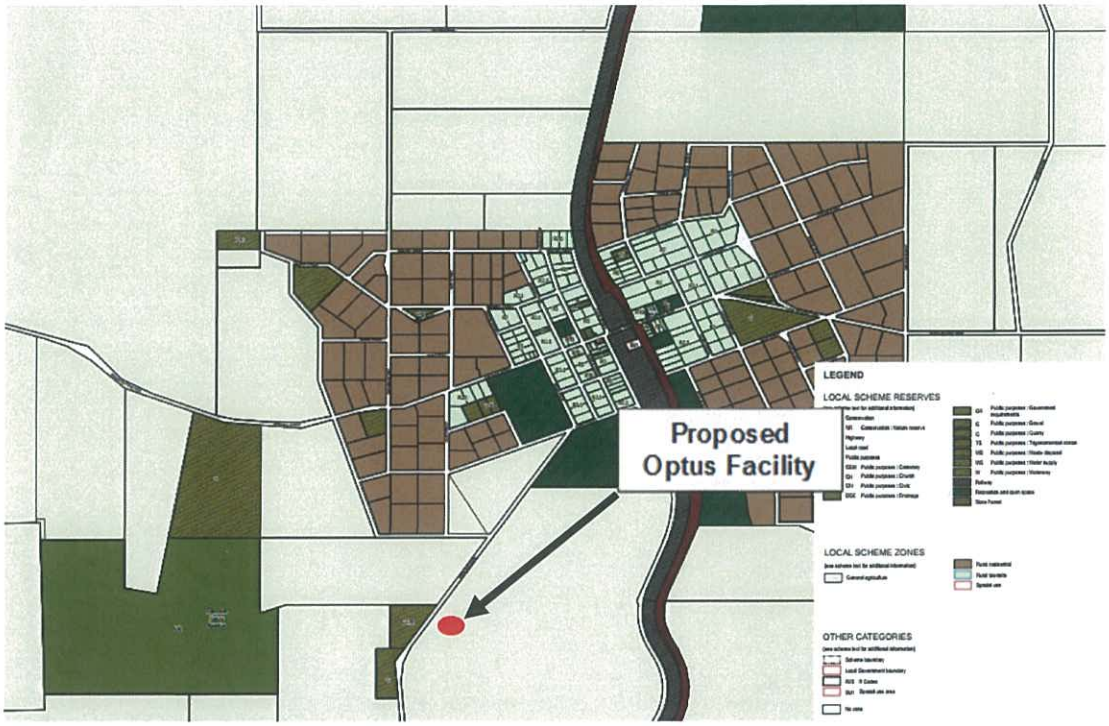

Figure 14: Shire of Cuballing LPS Zoning (*www.planning.wa.gov.au*)

8.2 Other Constraints (Overlays)

8.2.1 Bushfire

The proposed facility is located within an area identified as Bush Fire Prone (shown on maps produced by the Department of Fire & Emergency Service, **figure 15**). **SPP 3.7** – Planning in Bushfire Prone areas and provisions under the District Planning Scheme seek to prevent increasing the risk or consequence of bushfires in the area. The development will not emit undue heat or sparks and will not provide a source of fuel for bushfires. The structure and shelter are designed for use in bushfire prone areas. No habitable buildings are being introduced and therefore the development does not introduce any additional risks. The proposal will vital communication services in time of emergency which will assist firefighting and community announcement activities during these times.

Figure 15: Map of Bush Fire Prone Areas 2016 (Landgate SLIP)

9 VISUAL IMPACT

Mobile base stations are relatively commonplace in today's landscape – thousands of mobile telecommunications facilities are in operation across Australia, over a variety of land uses and environments.

Mobile telecommunications facilities are required to protrude above the surrounding landscape in order to function correctly and this site, at a height of 60m, will be visible from a number of surrounding perspectives. Optus has identified that the size of the facility is the lowest height capable of providing a feasible level of service to the area.

In order to provide coverage for users, sites are often required in or near populated areas to address the demand created by users. In this situation, Optus have had to balance the visual impacts to nearby rural living dwellings while remaining close enough to provide coverage for users.

It is acknowledged that the site, by virtue of its scale and location, will be visible from certain perspectives in the proximity of the site. In this case the site has been set back a minimum of 530m from the nearest residential dwelling located off Springhill Road. A very good level of existing vegetation will aid in screening the bulk of the proposal when viewed from this location.

The locality is designated as a rural area, and this is not expected to change in the near future. Accordingly, it is not envisaged that sensitive uses will, in the future, encroach upon the subject site.

10 CONCLUSION

Optus propose to provide improved call and data quality coverage to the Cuballing region.

The facility will form an integral component in the Optus mobile phone network and will provide an important community benefit by providing improved and reliable communications services to the existing local community and future development planned for the region.

The proposed location within a General Agricultural zoned area is considered logical and appropriate. Whilst the proposed location will be visible form some locations, most notably along Springhill Road, the area is defined by large farming lots that are typically very well vegetated able to provide to good visual mitigation, given the separation between sensitive land uses, the structure is believed to provide appropriate separation.

Importantly, the proposed facility represents a necessary piece of community infrastructure that the community rely upon, and one which future residential populations will continue to utilise.

Optus considers the proposed facility and its impacts would be appropriate and acceptable in the proposed location and respectfully requests favourable consideration by the Shire of Cuballing.

THIS PAGE IS LEFT BLANK INTENTIONALLY

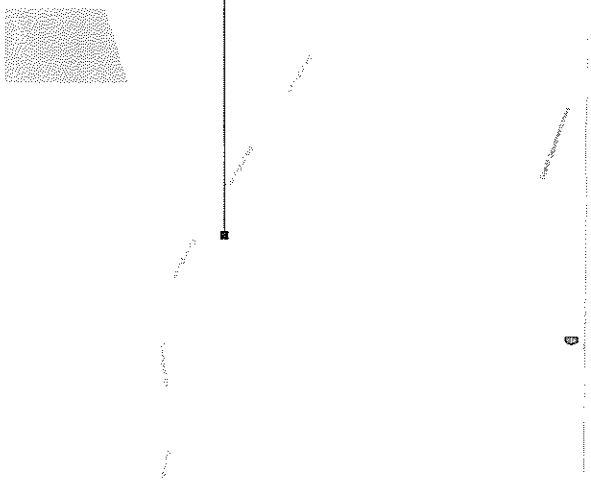

LOCALITY MAP

COPYRIGHT © GOOGLE MAPS

NOTE:
THIS DRAWING IS DIAGRAMMATIC ONLY AND SHOULD NOT BE SCALED. DIMENSIONS, COORDINATES, AND LEVELS SHOWN ARE NOMINAL AND SUBJECT TO CONFIRMATION BY SURVEYOR.

SITE ADDRESS:

LOT 2 SPRINGHILL ROAD
CUBALLING WA 6311

NOTES:

1. **BASIS OF DESIGN**
   - SITE INSPECTION 11/05/2016
2. **PANEL ANTENNAS**
   - 1-OFF PER SECTOR (EACH 2.6m LONG) AT EL 57m
   - SECTOR 1 - 10°, SECTOR 2 - 110°, SECTOR 3 - 270°
   - MOUNTED ON PROPOSED TRIANGULAR HEADFRAME
3. **TRANSMISSION**
   - Ø1800 PARABOLIC ANTENNA AT EL 53m-TBC
   - PROPOSED Ø1200 PARABOLIC ANTENNA AT EL 60m TO SERVE AS B END OF PROPOSED SITE P8091 POPANYINNING.
   - LINK SITE: PINGELLY (P0183)-TBC
   - TO BE CONFIRMED BY OPTUS
4. **EQUIPMENT SHELTER**
   - VOS 1.3 EQUIPMENT SHELTER (3.15m x 2.38m) SANDWICH PANEL SHELTER, COLOURED "PAPER BARK". SHELTER TO BE FIRE RATED
   - SUPPORTED ON BORED PIERS-TBC
5. **OPTUS GUYED MAST**
   - 60m HIGH GUYED MAST WITH TRIANGULAR HEADFRAME AT EL 57m
6. **FEEDER CABLES**
   - 1-OFF 6/12 MLEH AND 1-OFF 9/18 MLEH TO BE SHARED BY ALL SECTORS
   - LENGTH: 70m ALL SECTORS
   - 450mm WIDE HORIZONTAL CABLE LADDER
7. **SITE ACCESS**
   - ACCESS FROM SPRINGHILL RD VIA EXISTING FIRE TRACK ALONG PROPERTY FENCE LINE. 4WD REQUIRED FOR ACCESS
8. **ANTENNA ACCESS**
   - LADDER & 'LAD-SAF' PROVIDED ON TOWER
9. **POWER SUPPLY**
   - THREE-PHASE SUPPLY IS AVAILABLE FROM EXISTING WESTERN POWER POLE#554677 WITH REQUIRED UPGRADE
   - DETAILS TO BE CONFIRMED BY WESTERN POWER
10. **OTHER (PAINTING, LANDSCAPING, SCREENING)**
    - PROPOSED 4.5m FIRE BREAK AROUND THE COMPOUND

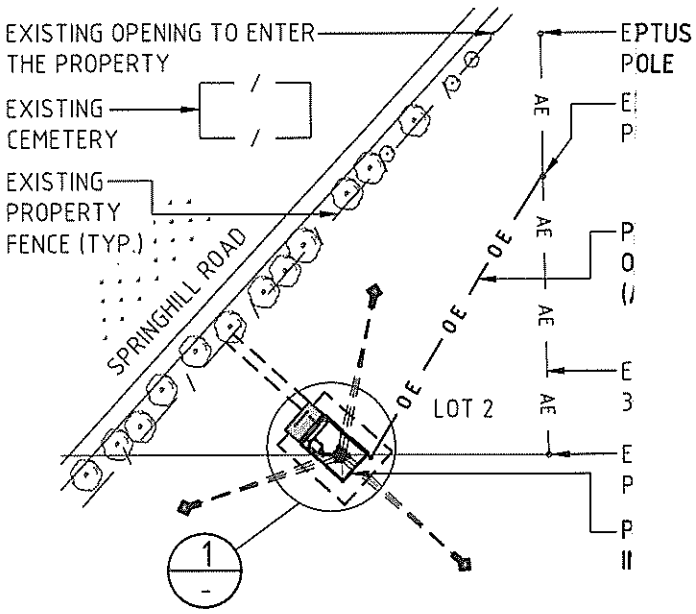

OVERALL SITE PLAN

SCALE 1:2000

Rev	Date	Revision Details	Consultant	CAD	Designer	Ve
02	04.10.16	PROPOSED GUYED MAST	DALY	GP	MI	DI
01	01.08.16	ISSUED FOR APPROVAL	DALY	GP	MI	DI

E LAYOUT

/AL

Drawing No. P8084-P1

Revision 02

A3

COPYRIGHT © OPTUS MOBILES PTY LTD ABN 65 054 365 696. ALL RIGHTS RESERVED. V

DRAFT ONLY

CAD File: C:\Users\gpimentel\Desktop\P8084-DSL.dwg Date: 10.01.2017 9:03 AM

NOTE:
THIS DRAWING IS DIAGRAMMATIC ONLY AND SHOULD NOT BE SCALED.

OFF)

PROPOSED OPTUS TRIAN

OFF) (TBC)

PROPOSED OPTUS
GUYED WIRES (TYP.)

PROPOSED OPTUS FEEDE
ALONG MAST FACE VIA S

US 60m HIGH GUYED MAST

PROPOSED OPTUS 450 W
ELEVATED CABLE LADDE

PROPOSED OPTUS EQUIP US
ER LINE

PROPOSED OPTUS 2.4m H TBC
FENCE WITH 3m WIDE AC

US
E

HIGH
G TYP.

7 EL 0.00m (RL 375m)
GROUND LEVEL

PROPOSED SHELTER FOO
INDICATIVE ONLY-TBC

PROPOSED OPTUS U/G F
APPROX. 25m (INDICATIV

PROPOSED OPTUS GUYE
FOUNDATION (SHOWN IN

DRAFT 02A

TE ELEVATION

Rev	Date	Revision Details	Consultant	CAD	Designer	Verifi
02	04.10.16	PROPOSED GUYED MAST	DALY	GP	MI	DI
01	01.08.16	ISSUED FOR APPROVAL	DALY	GP	MI	DI

VAL

Drawing No. P8084-P2

Revision 02

COPYRIGHT © OPTUS MOBILES PTY LTD ABN 65 054 365 696. ALL RIGHTS RESERVED. VEF

20 10 0 10 20 30 40 50mm

A3

CAD File C:\Users\gpimentel\Desktop\P8084-DSL.dwg Date 10.01.2017 9.03 AM

OPTUS

Environmental EME Report
Lot 2 Springhill Road, CUBALLING WA 6311

This report provides a summary of Calculated RF EME Levels around the wireless base station

Date 9/12/2016 **RFNSA Site No. 6311003**

Introduction

The purpose of this report is to provide calculations of EME levels from the existing facilities at the site and any proposed additional facilities.

This report provides a summary of levels of radiofrequency (RF) electromagnetic energy (EME) around the wireless base station at Lot 2 Springhill Road CUBALLING WA 6311. These levels have been calculated by Huawei using methodology developed by the Australian Radiation Protection and Nuclear Safety Agency (ARPANSA).

The maximum EME level calculated for the proposed systems at this site is 0.18% of the public exposure limit.

The ARPANSA Standard

ARPANSA, an Australian Government agency in the Health and Ageing portfolio, has established a Radiation Protection Standard specifying limits for general public exposure to RF transmissions at frequencies used by wireless base stations. The Australian Communications and Media Authority (ACMA) mandates the exposure limits of the ARPANSA Standard.

How the EME is calculated in this report

The procedure used for these calculations is documented in the ARPANSA Technical Report "Radio Frequency EME Exposure Levels - Prediction Methodologies" which is available at http://www.arpansa.gov.au.

RF EME values are calculated at 1.5m above ground at various distances from the base station, assuming level ground.

The estimate is based on worst-case scenario, including:

- wireless base station transmitters for mobile and broadband data operating at maximum power
- simultaneous telephone calls and data transmission
- an unobstructed line of sight view to the antennas.

In practice, exposures are usually lower because:

- the presence of buildings, trees and other features of the environment reduces signal strength
- the base station automatically adjusts transmit power to the minimum required.

Maximum EME levels are estimated in 360° circular bands out to 500m from the base station.

These levels are cumulative and take into account emissions from all wireless base station antennas at this site.
The EME levels are presented in three different units:

- volts per metre (V/m) – the electric field component of the RF wave
- milliwatts per square metre (mW/m²) – the power density (or rate of flow of RF energy per unit area)
- percentage (%) of the ARPANSA Standard public exposure limit (the public exposure limit = 100%).

Results

The maximum EME level calculated for the proposed systems at this site is 2.22 V/m; equivalent to 13.1 mW/m² or 0.18% of the public exposure limit.

RF EME Exposure Standard

The calculated EME levels in this report have been expressed as percentages of the ARPANSA RF Standard and this table shows the actual RF EME limits used for the frequency bands available. At frequencies below 2000 MHz the limits vary across the band and the limit has been determined at the Assessment Frequency indicated. The four exposure limit figures quoted are equivalent values expressed in different units – volts per metre (V/m), watts per square metre (W/m²), microwatts per square centimetre (μW/cm²) and milliwatts per square metre (mW/m²). Note: 1 W/m² = 100 μW/cm² = 1000 mW/m².

Radio Systems	Frequency Band	Assessment Frequency	ARPANSA Exposure Limit (100% of Standard)
LTE 700	758 – 803 MHz	750 MHz	37.6 V/m = 3.75 W/m² = 375 μW/cm² = 3750 mW/m²
WCDMA850	870 – 890 MHz	900 MHz	41.1 V/m = 4.50 W/m² = 450 μW/cm² = 4500 mW/m²
GSM900, LTE900, WCDMA900	935 – 960 MHz	900 MHz	41.1 V/m = 4.50 W/m² = 450 μW/cm² = 4500 mW/m²
GSM1800, LTE1800	1805 – 1880 MHz	1800 MHz	58.1 V/m = 9.00 W/m² = 900 μW/cm² = 9000 mW/m²
LTE2100, WCDMA2100	2110 – 2170 MHz	2100 MHz	61.4 V/m = 10.00 W/m² = 1000 μW/cm² = 10000 mW/m²
LTE2300	2302 – 2400 MHz	2300 MHz	61.4 V/m = 10.00 W/m² = 1000 μW/cm² = 10000 mW/m²
LTE2600	2620 – 2690 MHz	2600 MHz	61.4 V/m = 10.00 W/m² = 1000 μW/cm² = 10000 mW/m²
LTE3500	3425 – 3575 MHz	3500 MHz	61.4 V/m = 10.00 W/m² = 1000 μW/cm² = 10000 mW/m²

Further Information

The Australian Radiation Protection and Nuclear Safety Agency (ARPANSA) is a Federal Government agency incorporated under the Health and Ageing portfolio. ARPANSA is charged with responsibility for protecting the health and safety of people, and the environment, from the harmful effects of radiation (ionising and non-ionising).

Information about RF EME can be accessed at the ARPANSA website, http://www.arpansa.gov.au, including:

- Further explanation of this report in the document "Understanding the ARPANSA Environmental EME Report"
- The procedure used for the calculations in this report is documented in the ARPANSA Technical Report; "Radio Frequency EME Exposure Levels - Prediction Methodologies"
- the current RF EME exposure standard
  Australian Radiation Protection and Nuclear Safety Agency (ARPANSA), 2002, 'Radiation Protection Standard: Maximum Exposure Levels to Radiofrequency Fields — 3 kHz to 300 GHz', Radiation Protection Series Publication No. 3, ARPANSA, Yallambie Australia.
  [Printed version: ISBN 0-642-79400-6 ISSN 1445-9760] [Web version: ISBN 0-642-79402-2 ISSN 1445-9760]

The Australian Communications and Media Authority (ACMA) is responsible for the regulation of broadcasting, radiocommunications, telecommunications and online content. Information on EME is available at http://emr.acma.gov.au

The Communications Alliance Ltd Industry Code C564:2011 'Mobile Phone Base Station Deployment' is available from the Communications Alliance Ltd website, http://commsalliance.com.au .

Contact details for the Carriers (mobile phone companies) present at this site and the most recent version of this document are available online at the Radio Frequency National Site Archive, http://www.rfnsa.com.au.

REGISTER NUMBER	
2/P14367	
DUPLICATE EDITION	DATE DUPLICATE ISSUED
N/A	N/A

WESTERN AUSTRALIA

RECORD OF CERTIFICATE OF TITLE

UNDER THE TRANSFER OF LAND ACT 1893

VOLUME 1662 FOLIO 449

The person described in the first schedule is the registered proprietor of an estate in fee simple in the land described below subject to the reservations, conditions and depth limit contained in the original grant (if a grant issued) and to the limitations, interests, encumbrances and notifications shown in the second schedule.

REGISTRAR OF TITLES

LAND DESCRIPTION:

LOT 2 ON PLAN 14367

REGISTERED PROPRIETOR:
(FIRST SCHEDULE)

LINTON PARK FARMS PTY LTD OF 57 FORTUNE STREET, NARROGIN
IN 2/3 SHARE
ROGER DAVID JOHN NEWMAN OF "LINTON PARK", CUBALLING
IN 1/3 SHARE
AS TENANTS IN COMMON

(T G953455) REGISTERED 17 NOVEMBER 1998

LIMITATIONS, INTERESTS, ENCUMBRANCES AND NOTIFICATIONS:
(SECOND SCHEDULE)

1. G953453 MORTGAGE TO AUSTRALIA & NEW ZEALAND BANKING GROUP LTD REGISTERED 17.11.1998.

Warning: A current search of the sketch of the land should be obtained where detail of position, dimensions or area of the lot is required.
* Any entries preceded by an asterisk may not appear on the current edition of the duplicate certificate of title.
Lot as described in the land description may be a lot or location.

----------END OF CERTIFICATE OF TITLE----------

STATEMENTS:

The statements set out below are not intended to be nor should they be relied on as substitutes for inspection of the land and the relevant documents or for local government, legal, surveying or other professional advice.

SKETCH OF LAND: 1662-449 (2/P14367).
PREVIOUS TITLE: 1662-447.
PROPERTY STREET ADDRESS: NO STREET ADDRESS INFORMATION AVAILABLE.
LOCAL GOVERNMENT AREA: SHIRE OF CUBALLING.

LANDGATE COPY OF ORIGINAL NOT TO SCALE Wed May 4 14:41:07 2016 JOB 50813796

Landgate
www.landgate.wa.gov.au